TECHNICAL SHEET

DOWNPIPE BRACKET WITH THREAD M 10

W-WOB

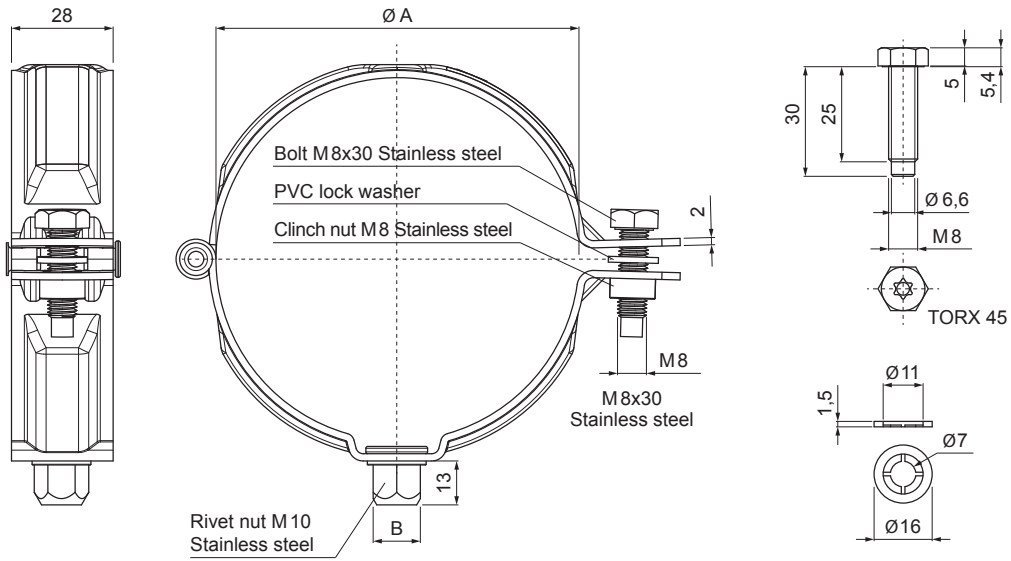

ZS Aluminium prepainted – Zinc grey – RAL extra

Dimensions [mm]		
Nominal size	Ø A	B
60	60	13
80	80	13
100	100	13
120	120	13
150	150	13

INDEX	CHANGE	DATE	SIGNATURE	KJG QUALITY	Scan code for 3D model
MATERIAL BRAND		W.C.	WEIGHT kg	SCALE	
SIZE, SEMI-FINISHED PRODUCTS					
AUXILIARY EQUIPMENT			STN STANDARD	SORTING NUMBER	
ELABORATED BY Ing. Kluska M.			NOTE	POSITION NUMBER	
TESTED BY					
TECHNOLOGIST	TECHNOLOGIST		OLD DRAWING	DRAWING NUMBER	
NAME Downpipe bracket with thread M 10			Number of sheets	W-WOB	Sheet

Created: 19.01.2026 21:56:19

Technical changes reserved