TECHNICAL SHEET

ELBOW 72°

W.15-WK

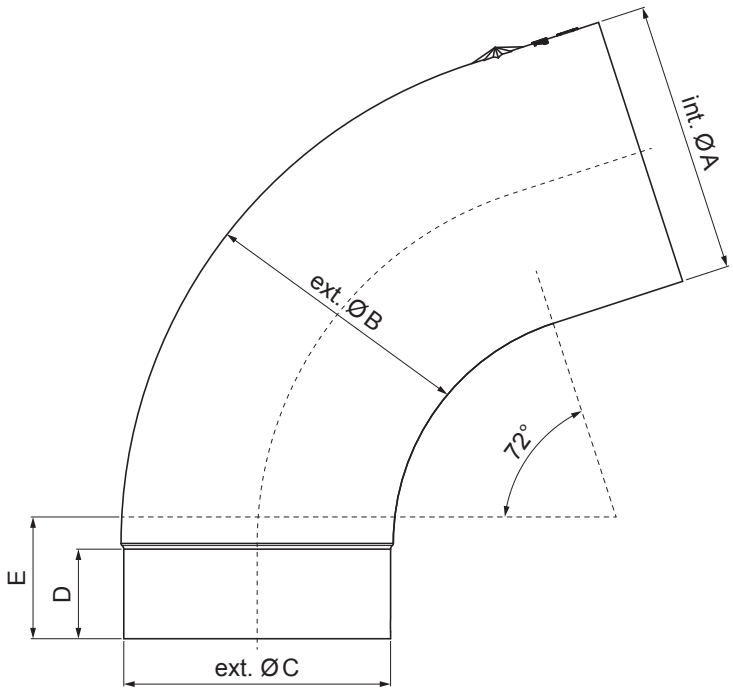

BM Aluminium prepainted W.15 – Pure white W.15 – RAL 9010

Dimensions [mm]					
Nominal size	Ø A	Ø B	Ø C	D	E
80	80,4	79,0	76,9	28	40
100	100,4	99,0	96,8	35	50
120	120,3	119,0	116,7	42	60

INDEX	CHANGE	DATE	SIGNATURE	KJG QUALITY	Scan code for 3D model
MATERIAL BRAND			W.C.	WEIGHT kg	SCALE
SIZE, SEMI-FINISHED PRODUCTS					
AUXILIARY EQUIPMENT				STN STANDARD	SORTING NUMBER
ELABORATED BY Ing. Kluska M.				NOTE	POSITION NUMBER
TESTED BY					
TECHNOLOGIST	TECHNOLOGIST			OLD DRAWING	DRAWING NUMBER
NAME Elbow 72°				Number of sheets W.15-WK	Sheet

Created: 19.01.2026 15:00:16

Technical changes reserved