TECHNICAL SHEET

OUTLET SQUARE/ROUND

W.15H-WKLG

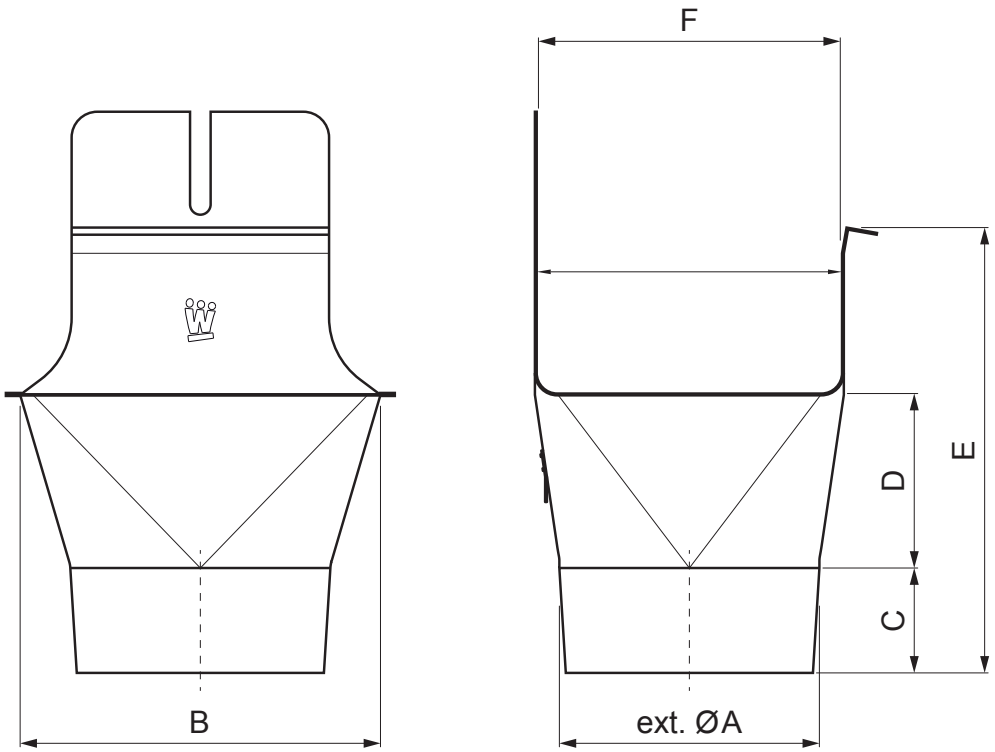

OCM Aluminium prepainted W.15 – Steel red W.15 – RAL 3009

Dimensions [mm]						
Nominal size	ØA	B	C	D	E	F
250/80	80	111	38	46	91	85
333/100	100	140	46	62	126	120
400/120	120	169	55	73	154	150

INDEX	CHANGE	DATE	SIGNATURE	KJG QUALITY	Scan code for 3D model
MATERIAL BRAND			W.C.	WEIGHT kg	SCALE
SIZE, SEMI-FINISHED PRODUCTS					
AUXILIARY EQUIPMENT				STN STANDARD	SORTING NUMBER
ELABORATED BY Ing. Kluska M.				NOTE	POSITION NUMBER
TESTED BY					
TECHNOLOGIST	TECHNOLOGIST			OLD DRAWING	DRAWING NUMBER
NAME Outlet square/round				Number of sheets W.15H-WKLG	Sheet

Created: 19.01.2026 17:47:14

Technical changes reserved