TECHNICAL SHEET

HOPPER CUBIC ECCENTRIC

P-PKLZ KX

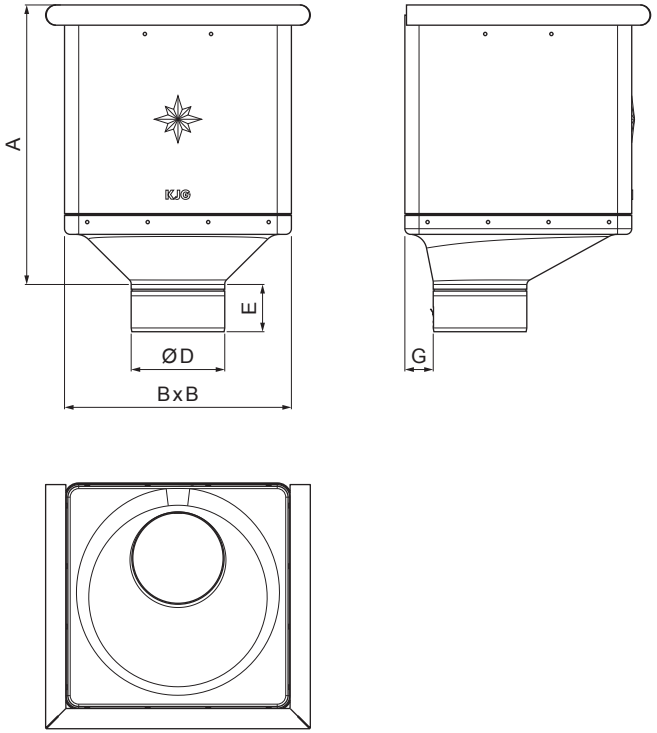

SB Galvanized steel prepainted – Grey white – RAL 9002

Dimensions [mm]					
Nominal size	A	B	D	E	G
80	283	240	79	44	30
100	283	240	99	50	30
120	283	240	119	60	30

INDEX	CHANGE	DATE	SIGNATURE	KJG QUALITY	Scan code for 3D model
MATERIAL BRAND			W.C.	WEIGHT kg	SCALE
SIZE, SEMI-FINISHED PRODUCTS					
AUXILIARY EQUIPMENT				STN STANDARD	SORTING NUMBER
ELABORATED BY Ing. Kluska M.				NOTE	POSITION NUMBER
TESTED BY					
TECHNOLOGIST	TECHNOLOGIST			OLD DRAWING	DRAWING NUMBER
NAME Hopper CUBIC ECCENTRIC				Number of sheets P-PKLZ KX	Sheet

Created: 19.01.2026 21:54:18

Technical changes reserved