TECHNICAL SHEET

ROOF STEP-SET – SET 800 x 250

FALZ-PDACH

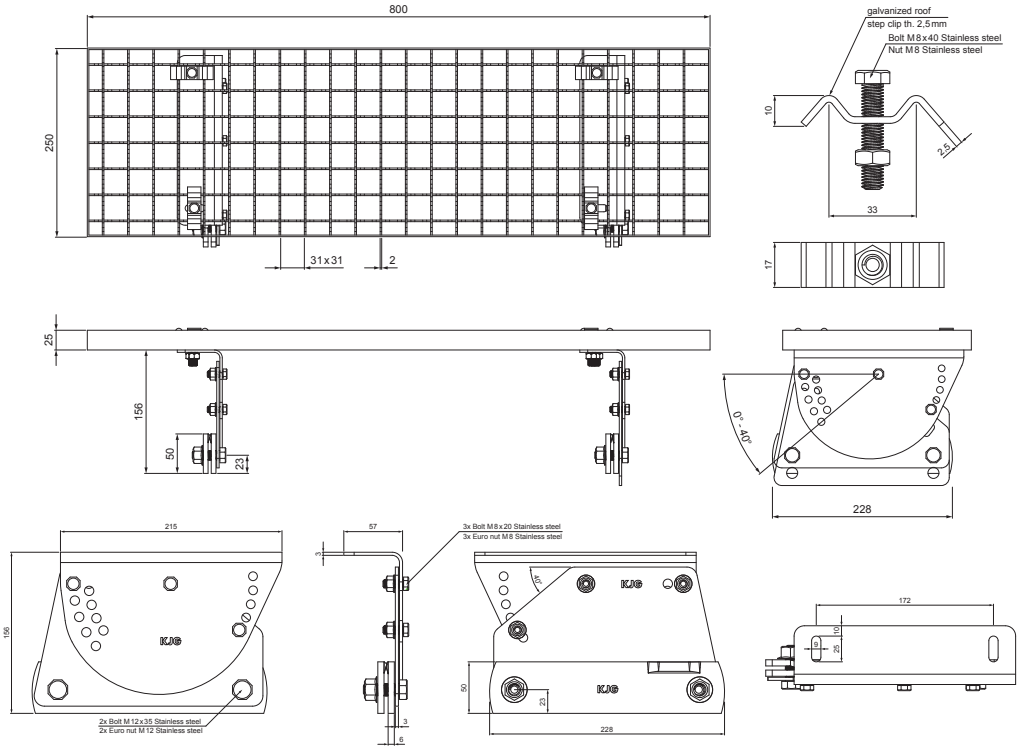

PACKAGING – SET:

- galvanized steel roof step 800 x 250 – 1 pcs
- aluminium roof step holder – 2 pcs
- bolt M 12 x 35 Stainless steel – 4 pcs
- nutt M 12 Stainless steel – 4 pcs
- bolt M 8 x 20 Stainless steel – 6 pcs
- Euro nut M 8 Stainless steel – 6 pcs
- galvanized roof step clip – 4 pcs
- bolt M 8 x 40 Stainless steel – 4 pcs
- nut M 8 Stainless steel – 4 pcs

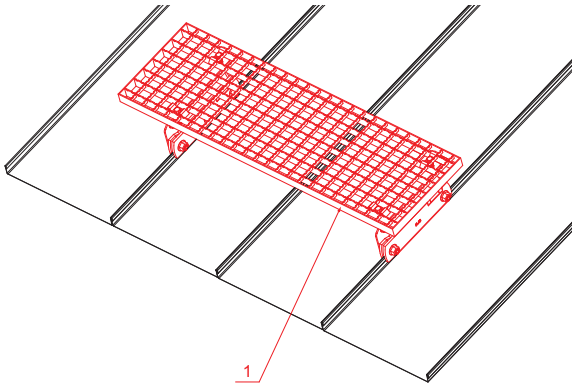

DETAIL:

1. roof step-set 800 x 250

MM Galvanized steel prepainted – Metallic copper – RAL extra

INDEX / CHANGE		DATE	SIGNATURE	KJG QUALITY	Scan code for 3D model
MATERIAL BRAND			W.C.	WEIGHT kg	SCALE
SIZE, SEMI-FINISHED PRODUCTS					
AUXILIARY EQUIPMENT				STN STANDARD	SORTING NUMBER
ELABORATED BY Ing. Kluska M.				NOTE	POSITION NUMBER
TESTED BY					
TECHNOLOGIST	TECHNOLOGIST			OLD DRAWING	DRAWING NUMBER
NAME Roof step-set 800 x 250				FALZ-PDACH	
				Number of sheets	Sheet

Created: 05.06.2026 00:56:43

Technical changes reserved