TECHNICAL SHEET

SELF-DRILLING MOUNTING SCREW GM-S WITH FLAT HEAD

CLICK-VHL SK

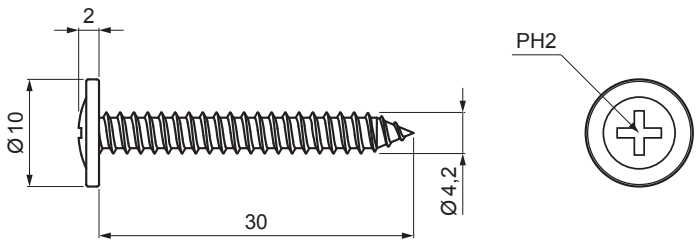

DETAIL:

1. self-drilling mounting screw GM-S with flat head

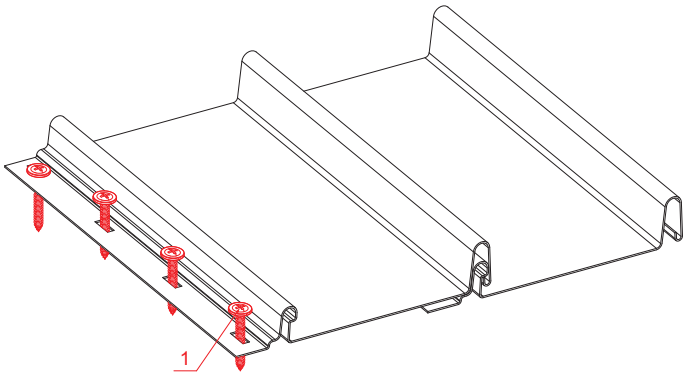

P Galvanized steel – Natur

INDEX / CHANGE		DATE	SIGNATURE	KJG QUALITY	Scan code for 3D model
MATERIAL BRAND			W.C.	WEIGHT kg	SCALE
SIZE, SEMI-FINISHED PRODUCTS					
AUXILIARY EQUIPMENT				STN STANDARD	SORTING NUMBER
ELABORATED BY Ing. Kluska M.				NOTE	POSITION NUMBER
TESTED BY					
TECHNOLOGIST	TECHNOLOGIST			OLD DRAWING	DRAWING NUMBER
NAME Self-drilling mounting screw GM-S with flat head				Number of sheets CLICK-VHL SK	Sheet

Created: 04.06.2026 14:07:54

Technical changes reserved