TECHNICAL SHEET

ELBOW 72°

P-PK

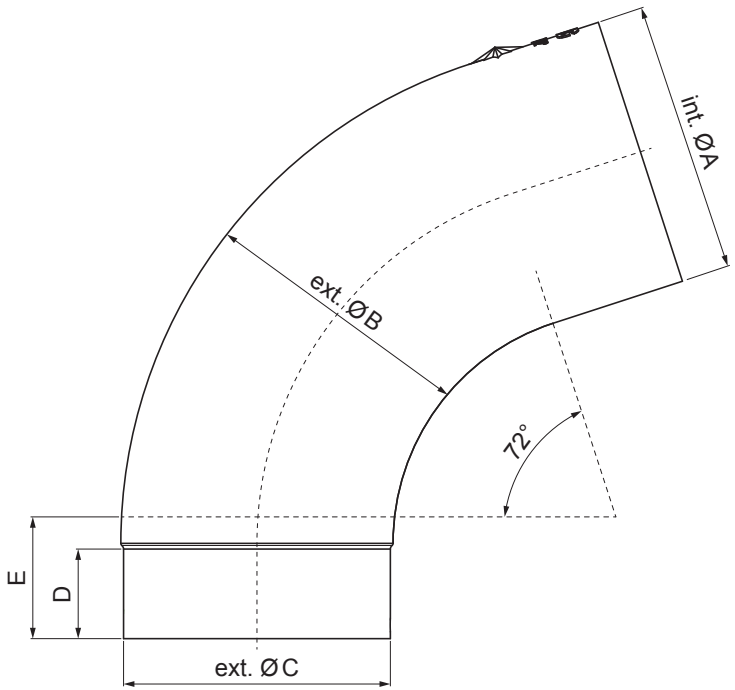

TZ Galvanized steel prepainted – Reseda green – RAL 6011

Dimensions [mm]					
Nominal size	Ø A	Ø B	Ø C	D	E
60	60,7	58,7	58,4	-	30
80	80,4	79,0	76,9	28	40
100	100,4	99,0	96,8	35	50
120	120,3	119,0	116,7	42	60
150	150,3	149,2	148,7	-	75

INDEX	CHANGE	DATE	SIGNATURE	KJG QUALITY	Scan code for 3D model
MATERIAL BRAND			W.C.	WEIGHT kg	SCALE
SIZE, SEMI-FINISHED PRODUCTS					
AUXILIARY EQUIPMENT				STN STANDARD	SORTING NUMBER
ELABORATED BY Ing. Kluska M.				NOTE	POSITION NUMBER
TESTED BY					
TECHNOLOGIST	TECHNOLOGIST			OLD DRAWING	DRAWING NUMBER
NAME Elbow 72°				Number of sheets P-PK	Sheet

Created: 19.01.2026 21:54:31

Technical changes reserved