TECHNICAL SHEET

PIPE FOR SNOW STOPPER

ZS-PZSF RU 32

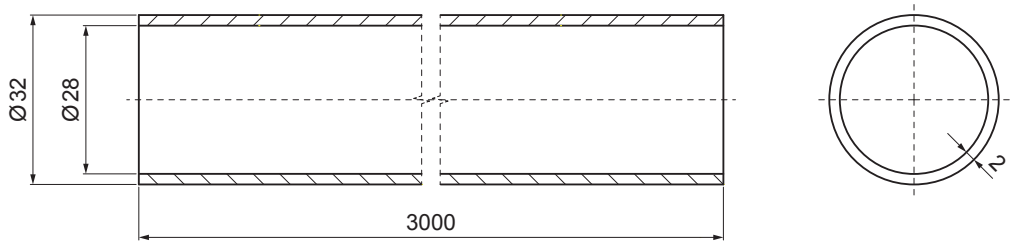

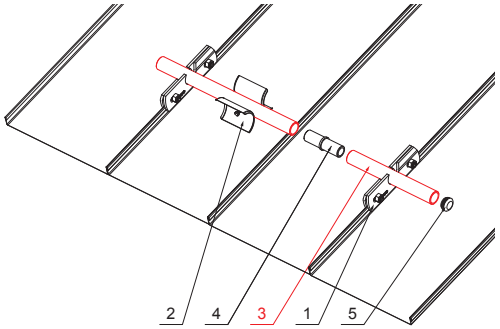

DETAIL:

1. snow stopper clamp for falz
2. ice breaker for snow stopper for falz
3. pipe for snow stopper
4. PVC pipe coupling for snow stopper
5. PVC pipe end cap for snow stopper

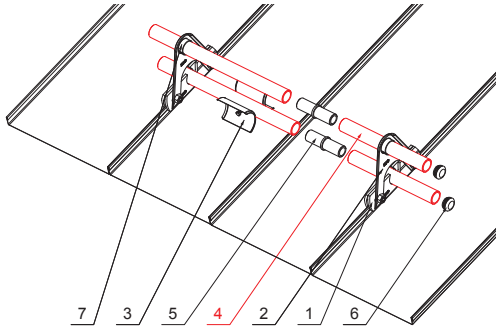

DETAIL:

1. snow stopper clamp for falz
2. extension for snow stopper pipe holder for falz
3. ice breaker for snow stopper for falz
4. pipe for snow stopper
5. PVC pipe coupling for snow stopper
6. PVC pipe end cap for snow stopper
7. PVC spacer ring for snow stopper

MZ

Color : Galvanized steel prepainted – Moss green – RAL 6005
Material: Aluminium – Natur

INDEX	CHANGE	DATE	SIGNATURE	KJG QUALITY	Scan code for 3D model
MATERIAL BRAND			W.C.	WEIGHT kg	SCALE
SIZE, SEMI-FINISHED PRODUCTS					
AUXILIARY EQUIPMENT				STN STANDARD	SORTING NUMBER
ELABORATED BY Ing. Kluska M.				NOTE	POSITION NUMBER
TESTED BY					
TECHNOLOGIST	TECHNOLOGIST			OLD DRAWING	DRAWING NUMBER
NAME Pipe for snow stopper				Number of sheets ZS-PZSF RU 32	Sheet

Created: 19.01.2026 18:04:53

Technical changes reserved