TECHNICAL SHEET

# RIDGE EDGE CAP ROUNDED

# W-UNI UHO

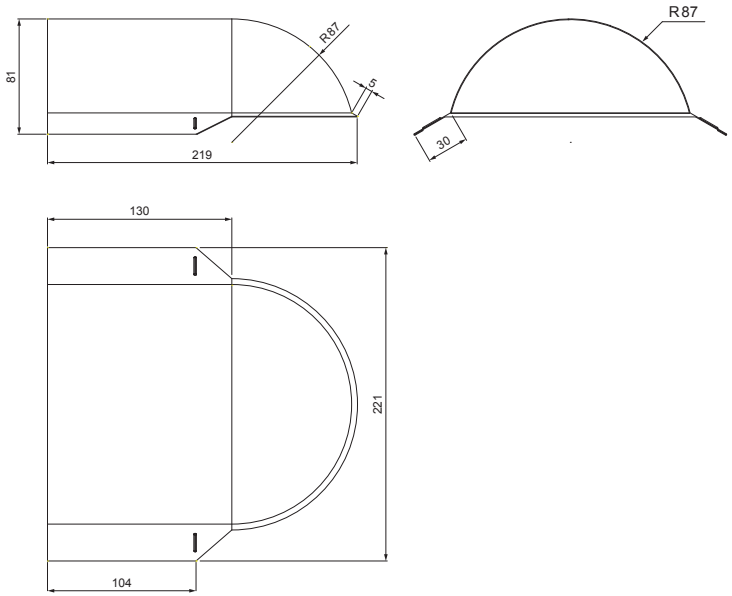


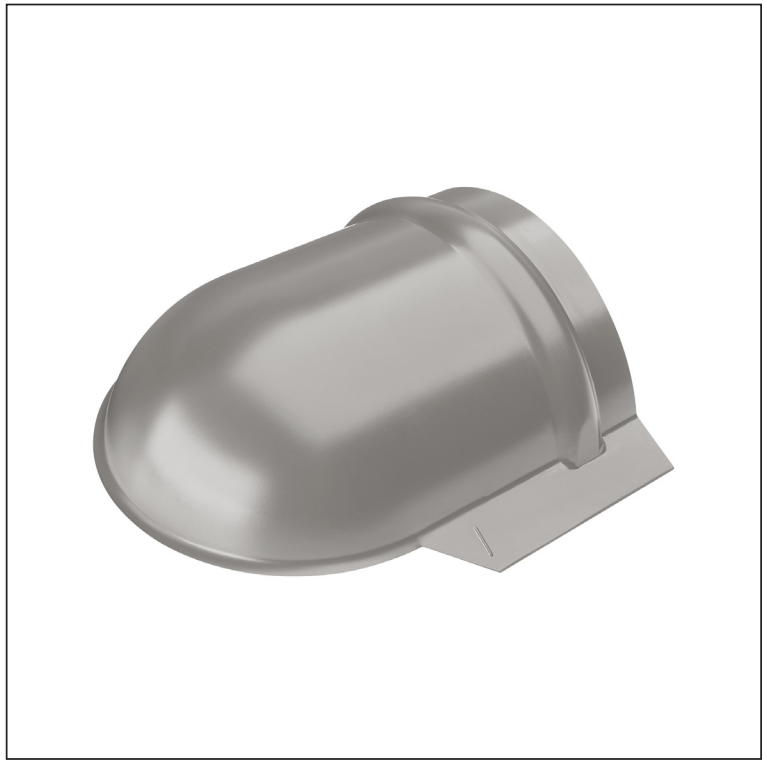

**DETAIL:**

1. ridge edge cap rounded
2. rivet 3,2x8 (min. 3pcs)
3. ridge cap for metal roofing
4. farmer screw 4,8x20
5. metal roofing
6. roof battens
7. battens
8. rafter
9. drip edge
10. protective ventilation belt
11. foil
12. gutter half-round
13. hook

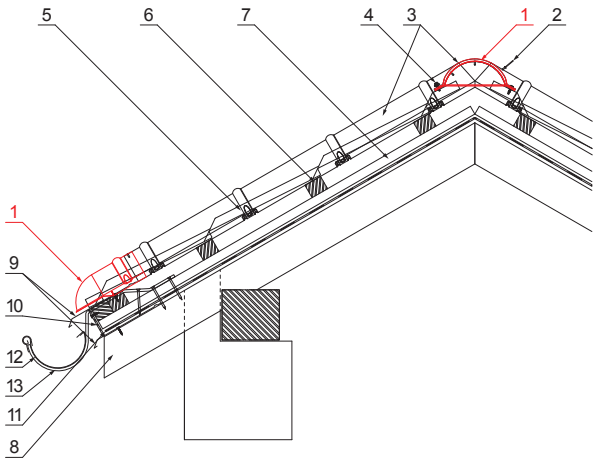


**BHT** Aluminium prepainted – Grey aluminium – RAL 9007

| | | | | | |
|---|---|---|---|---|---|
| INDEX | CHANGE | DATE | SIGNATURE | KJG QUALITY | Scan code for 3D model |
| MATERIAL BRAND | | W.C. | WEIGHT kg | SCALE | |
| SIZE, SEMI-FINISHED PRODUCTS | | | | | |
| AUXILIARY EQUIPMENT | | | STN STANDARD | SORTING NUMBER | |
| ELABORATED BY Ing. Kluska M. | | | NOTE | POSITION NUMBER | |
| TESTED BY | | | | | |
| TECHNOLOGIST | TECHNOLOGIST | | OLD DRAWING | DRAWING NUMBER | |
| NAME Ridge edge cap rounded | | | Number of sheets | W-UNI UHO | Sheet |

Created: 25.05.2026 04:03:53

Technical changes reserved